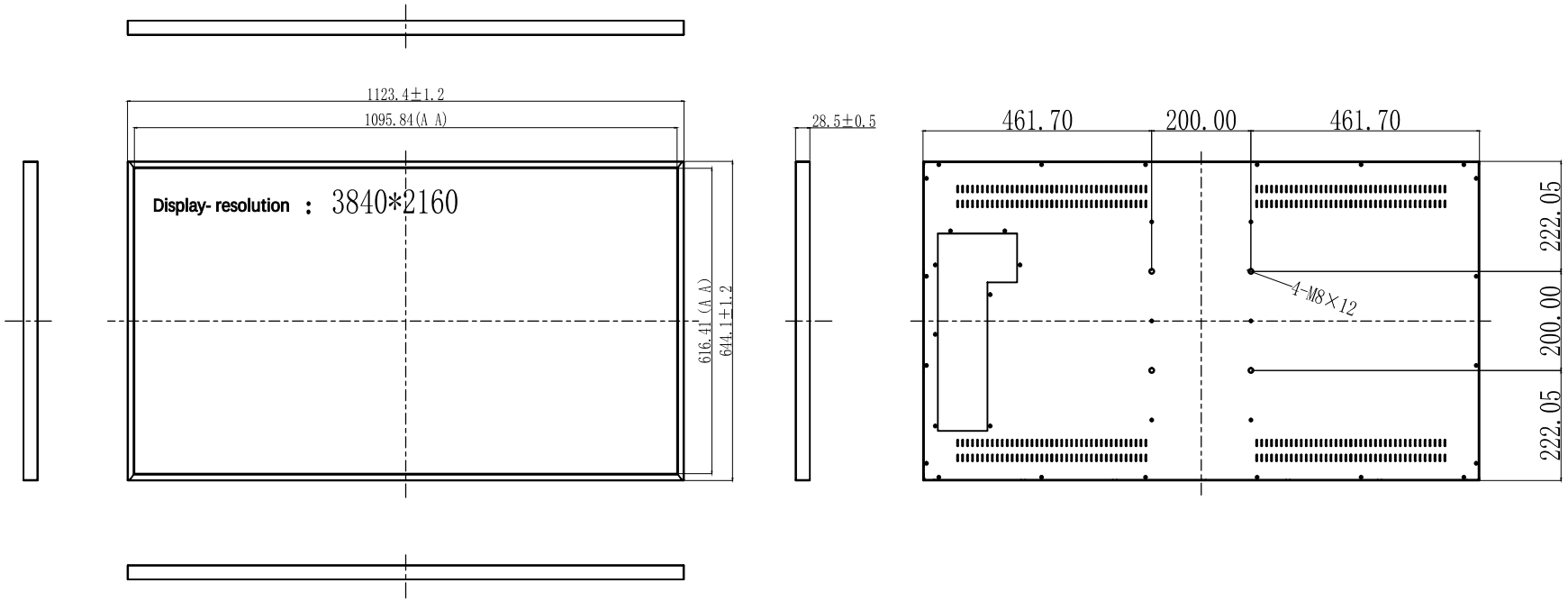

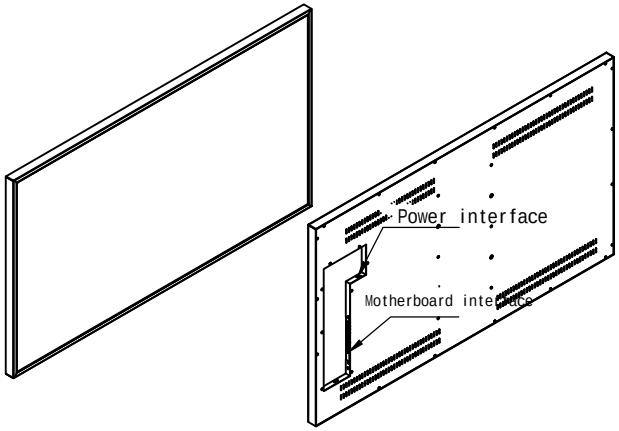

1. Unit: mm
2. Display area: 1095.84 * 616.41mm
3. Resolution: 1920 * 1080
4. Brightness: 300 cd/ m² (TYP)
5. Visual angle: 178 °
6. Storage temperature: -20 ° C~50 ° C Storage humidity: 10-80% RH
7. Working temperature: 0 ° C~50 ° C Working humidity: 10-80% RH
8. Input voltage: AC 110-240V

General tolerance (unit: mm)	F	M
		✓
0----200	±0.3	
200--500	±0.5	
500--800	±0.7	
800--1200	±1.0	
1200--	±1.5	

First perspective

Model type	G500AYA-S01	Version	A0	Material	
Part Number		Page	1/1	50″complete machine	
Drawing No					
Design		To examine		Ratify		Date	