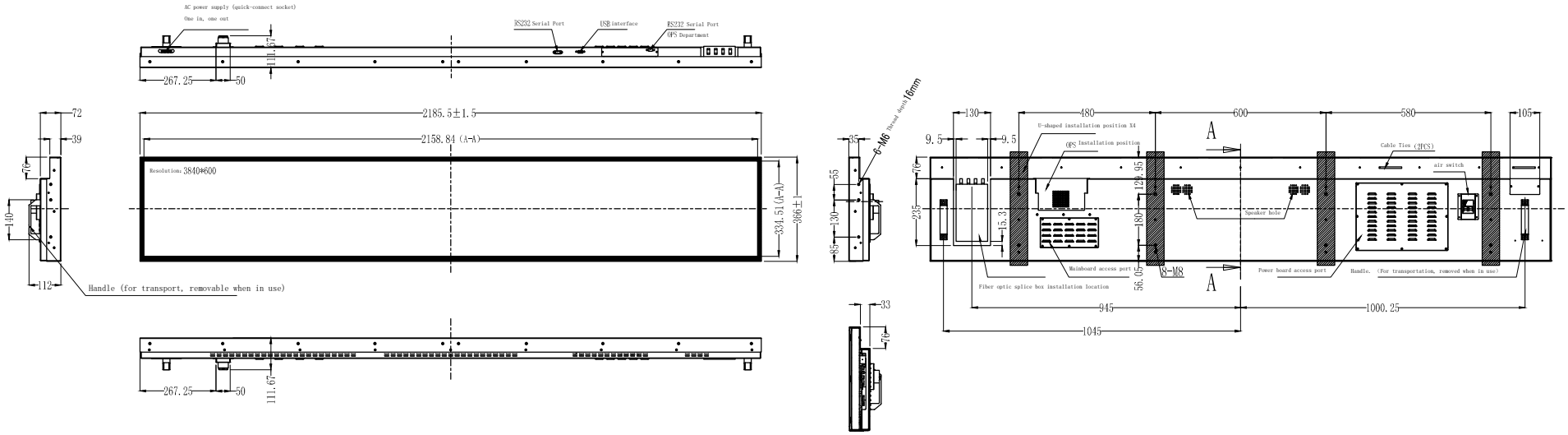

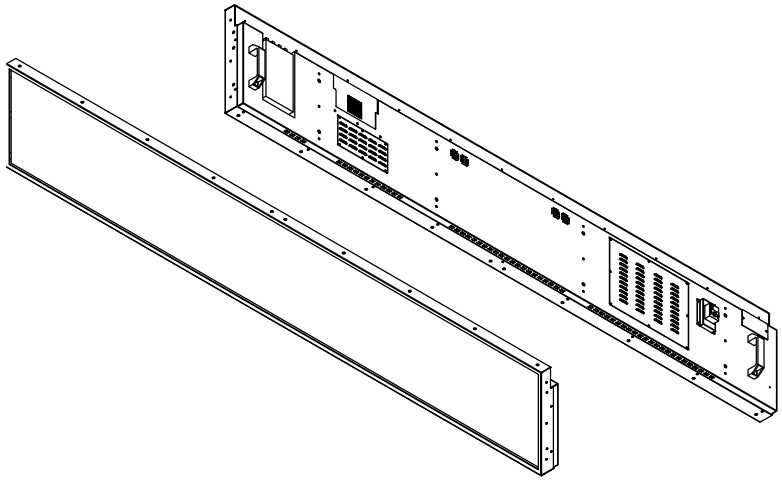

1. Unit: mm
2. Display area: 2158.84 * 334.5mm
3. Resolution: 3840 * 600
4. Brightness: 500 cd/ m² (TYP)
5. Visual angle: 178 °
6. Storage temperature: -20 ° C~50 ° C Storage humidity: 10-80% RH
7. Working temperature: 0 ° C~50 ° C Working humidity: 10-80% RH
8. Input voltage: AC 110-240V

General tolerance (unit: mm)	F	M
		✓
0----200	±0.3	
200--500	±0.5	
500--800	±0.7	
800--1200	±1.0	
1200--	±1.5	

Model type	G860AY600-D01		Version	A0	Material
Part Number			Page	1/1	86″complete machine
Drawing No					
Design		To examine		Ratify	Date

First perspective